Ersatzteilliste

Artikelnummer:

216041

Sprachen:

de, en

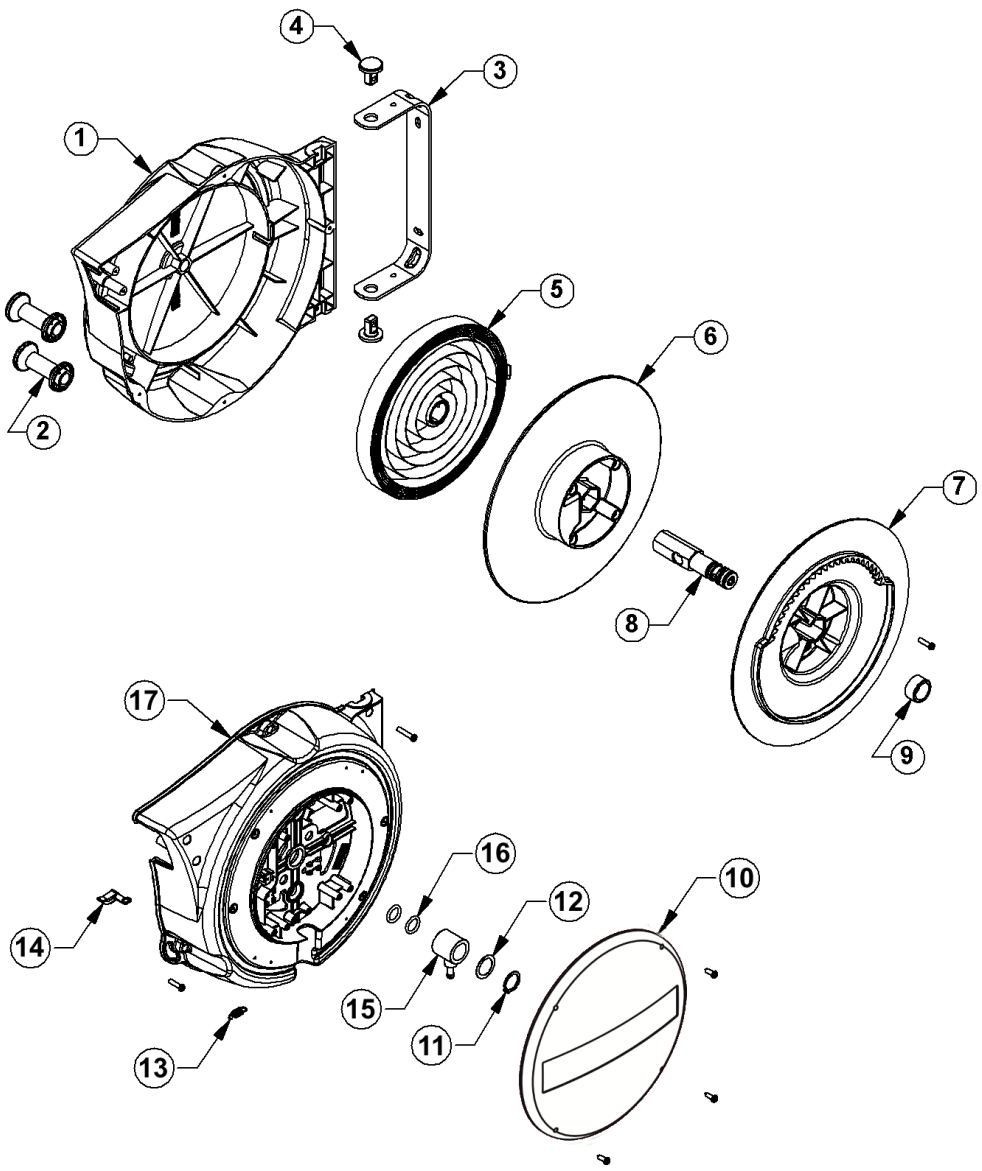

BERNER

216041

Spare parts

Nr.	Code	Berner Art.	Description
1	AM40.021		Half-case spring side
2	PRO210.301 (2)		Cable Guide Roller
3	AM40.062	244093	Bracket
4	810.082 (2)	244096	Bracket Spin
5	810.080	244157	Spring
6	AM80.054	244091	Half-Reel Spring Side
7	AM80.052	244092	Half-Reel Collector Side
8	AM80.065	244090	Reel Shaft
9	804.020	244098	Bushing
10	AM40.035	244094	Cover
11	000.728	244099	Retaining Ring
12	000.316	244100	Washer
13	831.764	244095	Ratchet spring
14	831.762	244097	Ratchet
15	805.062	244067	Hub for Ø8 Hose
16	000.270 (2)	244101	OR Gasket
17	AM40.011		Half-case collector side
	AM80.045	244066	Ø8 Hose – 10 m